SmartDC™

Multi-Standard DC Fast Charging Station

The SmartDC™ is a robust, reliable, 50 kW or 100 kW multi-standard charging station for commercial and industrial applications designed for indoor and outdoor use. Its sturdy construction ensures longer service life and greater operational reliability, even in harsh environmental conditions.

Equipped with both CHAdeMO and SAE Combo (CCS1) connectors, the SmartDC charging station is designed to offer a fast, reliable charging experience for every electric vehicle capable of DC fast-charging.

The SmartDC comes with a remote management tool that connects with FLO's cloud-based servers, allowing for remote updates and monitoring. With this powerful capability, the SmartDC can be integrated into any modern EV Charging Network.

Key features

- Robust type 3R casing, reliable and designed to withstand harsh weather and corrosion
- Modular design to facilitate servicing and maintenance
- Available in two versions: 50 kW and 100 kW maximum output
- Compatible with the CHAdeMO and SAE Combo (CCS1) protocols (Tesla compatible, with adapter)
- RFID card and/or mobile app authentication and payment
- Optional cable management system in the 50 kW version
- Flexible billing based on time and/or kWh delivered, when permitted by local jurisdictions

Benefits

- Reduced Mean Time To Repair (MTTR) and enhanced customer experience with the remote management tool
- Interoperability with networks supporting OCPP1.6J
- Enhanced charging station owner experience with complete remote management capabilities including software and firmware update
- Enhanced user experience with real-time updates and notifications to drivers
- Revenue generation through payments via RFID member cards and mobile app
- Configurable Access Control
- Reduced lead time thanks to its North American manufacturing

Applications

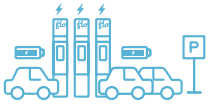

Commercial

For parking lot owners interested in offering their customers a first-class experience by providing EV DC fast-charging services.

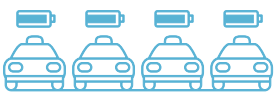

Fleet

For EV fleet managers who want to minimize charging time and maximize the usage rate of their fleet.

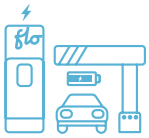

Gas stations

For gas station owners who wish to offer a complementary service that will help retain customers migrating to EVs.

Rest areas

For public administrators responsible for highways that wish to encourage electromobility between cities.

Dimensions and customization

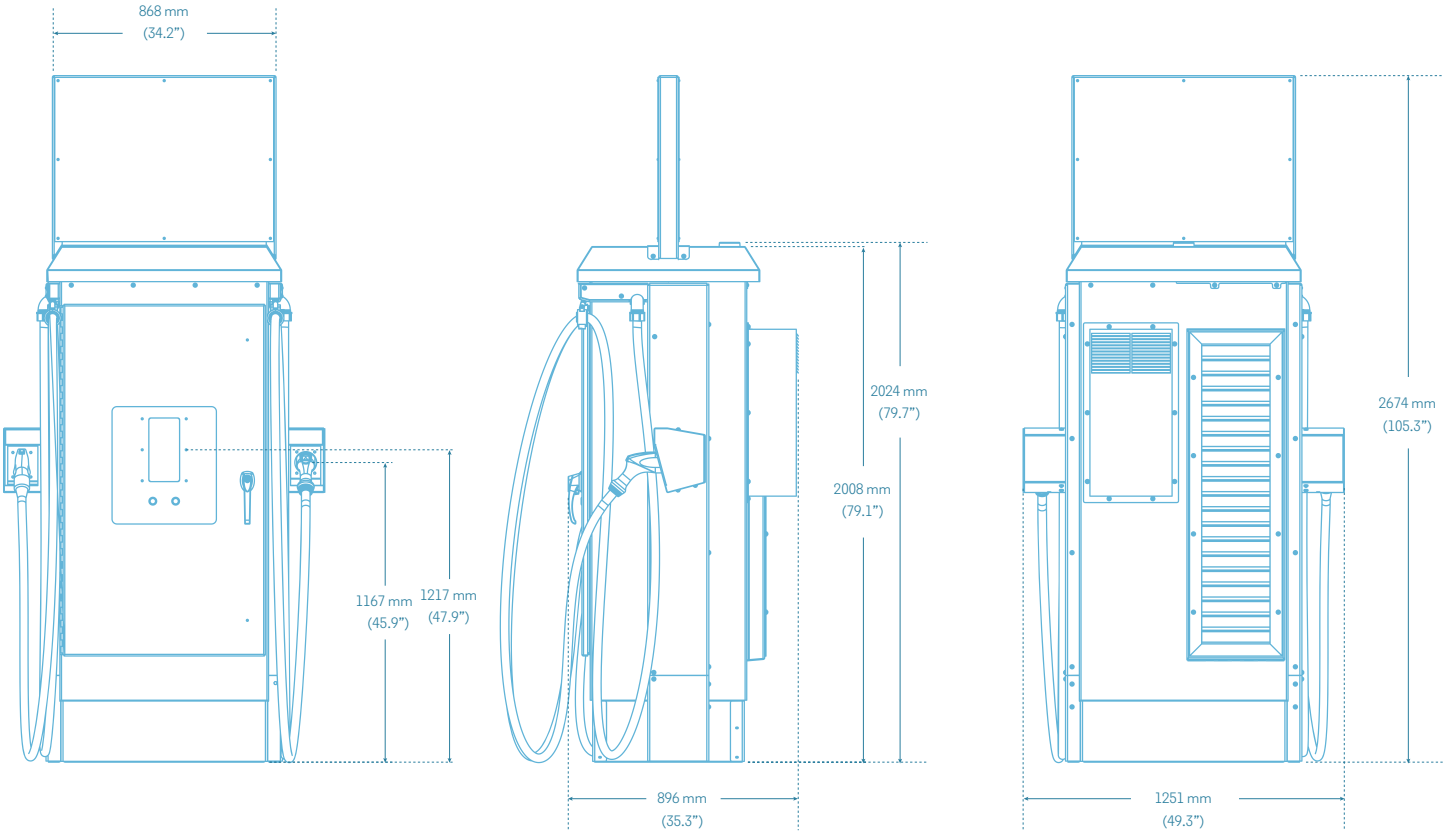

Every charging station includes a customizable branding area. This area allows the display of partner logos or other publicity.

Customizable partner panel area
Dimensions (H x W): 25.5 cm x 40.64 cm (10.31" x 16.14")

Contact FLO™ for artwork templates and material specifications.

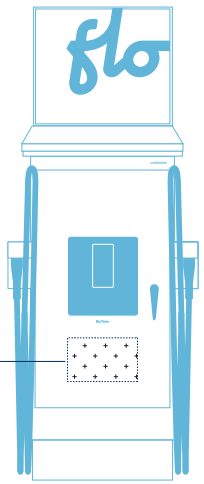

SmartDC™

Technical specifications

	50 kW	100 kW
Casing	Aluminum Type 3R enclosure – Resistant to harsh weather and vandalism	
Charging connectors	SAE Combo (CCS1) and CHAdeMO	
Cable length	6.1 m (20') CMS included as an option	3.7 m (12')
Supply voltage	Nominal three-phase 480 Y/277 VAC (neutral required), 60 Hz nominal (408 to 528 VAC, 55 to 65 Hz)	
Maximum input current	65 A @ 480 VAC	130 A @ 480 VAC
Maximum input power	54 kVA	108 kVA
Power factor	98% or better	
Efficiency (at max. output power)	93% or better	
Output power measurement tolerance	+/-1%	
Output voltage range	50 to 500 VDC	
Output current range	0.5 to 125 ADC	0.5 to 200 ADC
Dimensions (H x W x D)	2,024 mm x 1,251 mm x 833 mm (79.7" x 49.25" x 32.8") **Height with top sign installed** 2,674 mm (105.28")	
Weight	255 kg (560 lbs) **With cable management system** 675 lbs (300 kg)	300 kg (675 lbs)
Operating temperature	-40 °C to 50 °C (-40 °F to 122 °F)	
Storage temperature	-40°C to +70°C (-40°F to 158°F)	
Humidity	Up to 95% (non-condensing)	
RFID card reader	Fitted standard. Supports ISO 14443 A/B, ISO 15693.	
Certifications	cULus: UL 2202, UL 2231-1, UL 2231-2, CSA C22.2 No. 107.1 CSA C22.2 No. 281.1, CSA C22.2 No. 281.2 FCC part 15 Class A ICES-3 (A) Energy Star certified (*50 kW certified, 100 kW in progress)	
Networking	Cellular – 4G (LTE), HSPA+	
Model #	DCCH501AN1-FL-P03	DCCH501AO1-FL-P03

ENERGY STAR

Made in Canada

Designed and manufactured by AddÉnergie Technologies Inc.

For more information
info@flo.com
1 855 543 8356
flo.com

Document ID: FLO__SmartDC_SpecSheet_V.2.0.4_2022-08-22_CA_EN
FLO CA: © 2022 Services FLO Inc., All rights reserved. FLO, the FLO logo, LEAD THE WAY, and TRACEZ LA VOIE are trademarks of Services FLO Inc. ADDÉNERGIE is a trademark of AddÉnergie Technologies Inc. used under license by Services FLO Inc.

This document is provided as a general instruction guide. All pictures shown are for illustration purposes only. Actual stations may vary in size or due to product enhancements, in which case additional steps may be required. AddÉnergie Technologies Inc. and its subsidiaries ("AddÉnergie") reserve the right to alter this document and any product offerings and specifications at any time without notice and AddÉnergie does not guarantee that that this version of the document is current. It is your responsibility to comply with all applicable laws, including those related to accessibility, zoning, and to exercise due diligence when conducting an installation or using this product. Careless installation or use may result in injury or product damage. To fullest extent permitted by applicable laws, AddÉnergie disclaims any liability for personal injury or property damage resulting from the installation or use of this product.