CoRe+™

Installation Guide for Pedestal

AddENERGIE
Smart Charging Solutions

Table of contents

Specifications 4
Maintenance and Safety 5
Dimensions 6
Pedestal Installation 7
Conduit Positioning 8
1 or 2 devices on separate Electrical Circuits 9
Multiple Pedestals, Multiple Devices
on independent Electrical Circuits 10
Multiple Pedestals, Multiple Devices sharing
the same Electrical Circuit 11
Multiple Pedestals, Multiple Devices sharing
the same Electrical Circuit, but with Circuit
Breaker for each Devices 12

V10-2015-09-25

2015 ADDÉNERGIE TECHNOLOGIES INC. ALL RIGHTS RESERVED. Information and Specifications Contained in this Document are Subject to Change, Amendments, and Additions at any Time, Without Notice

Specifications

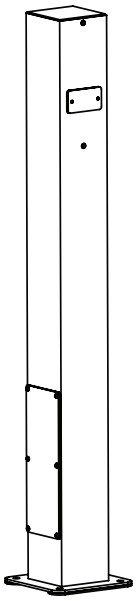

Product family: **CoRe+™**

Model: C+V1-PED-ADD

Revision: A

Company Info: AddEnergie Technologies Inc.

Document revision number: V10-2015-09-25

©2015 AddÉnergie Technologies Inc. All Rights Reserved. This document is protected by copyright laws of many countries and should not be modified, reproduced or distributed without the prior written consent of AddÉnergie Technologies.

Specifications:

Ingress Protection rating: NEMA 3R enclosure, suitable for outdoor use.
Shipping weight: Approximately 15 kg
Security standard compliance:

- UL 50 Issue: 2007/09/04 Ed:12 Rev: 2012/04/27 UL Standard for Safety Enclosures for Electrical Equipment, Non-Environmental Considerations
- UL 50E Issue: 2007/09/04 Ed: 1 Rev: 2012/04/27 UL Standard for Safety Enclosures for Electrical Equipment, Environmental Considerations
- CSA C22.2#94.1 Issued: 2007/09/04 Ed: 1 (R2012) Enclosures for Electrical Equipment, Non-Environmental Considerations - General Instruction No.1: 2008/07/01
- CSA C22.2#94.2 Issue: 2007/09/04 Enclosures for Electrical Equipment Environmental Considerations; General Instruction No. 1: 2008/07/01

Intertek
4009606

2015 ADDÉNERGIE TECHNOLOGIES INC. ALL RIGHTS RESERVED. Information and Specifications Contained in this Document are Subject to Change, Amendments, and Additions at any Time, Without Notice

Maintenance and Safety

IMPORTANT SAFETY INSTRUCTIONS - PLEASE DO NOT DISCARD THESE INSTRUCTIONS

Carefully read this guide before installing the pedestal

1. This pedestal was designed to be ground-based, it must be mounted on a non-combustible surface.
2. Make sure with local authorities that the location where the pedestal is to be installed is free from underground pipelines or electrical equipment, otherwise you might inflict yourself serious injuries.
3. Grounding: to ensure the safe operation of the pedestal, it must be connected to a grounding circuit compliant with local regulations and installed by a certified electrician.
4. Communicate with a certified contractor, certified electrician or trained installer to ensure compliance with local building code, regulation, security standards and weather conditions.
5. Handle parts with care, since they can be sharp-edged. Always use safety glasses and gloves when unpacking and installing.
6. Some parts are heavy and could cause injuries. Use proper lifting techniques and wear safety boots at all times during installation.

2015 ADDÉNERGIE TECHNOLOGIES INC. ALL RIGHTS RESERVED. Information and Specifications Contained in this Document are Subject to Change, Amendments, and Additions at any Time, Without Notice

Dimensions

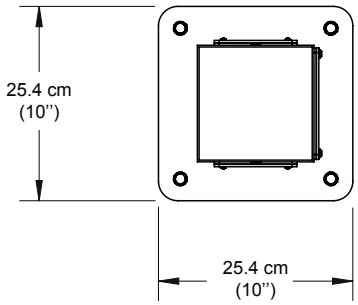

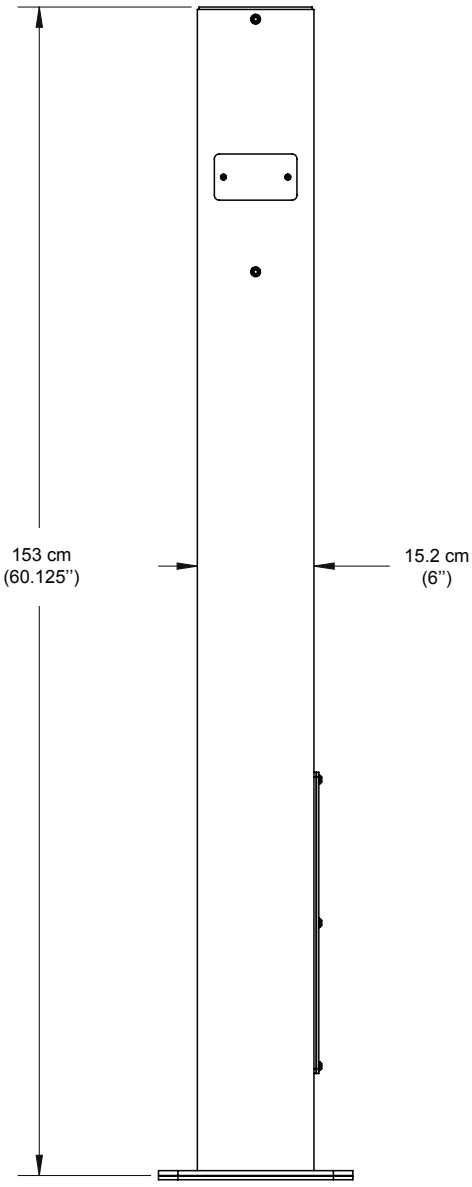

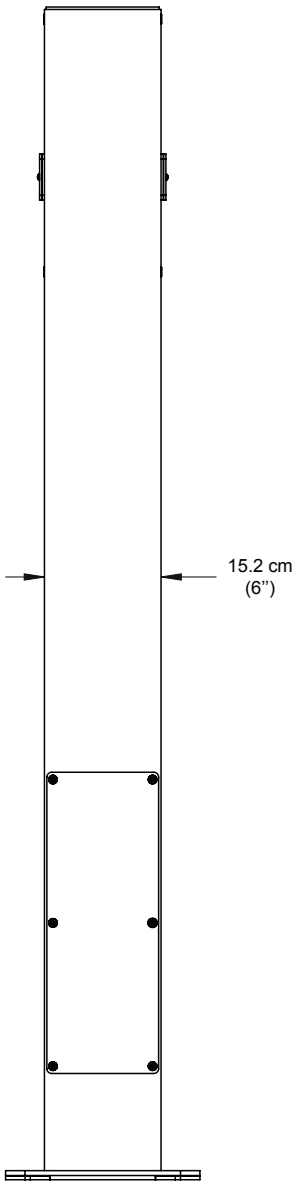

V10-2015-09-25

2015 ADDÉNERGIE TECHNOLOGIES INC. ALL RIGHTS RESERVED. Information and Specifications Contained in this Document are Subject to Change, Amendments, and Additions at any Time, Without Notice

Pedestal Installation

Anchor

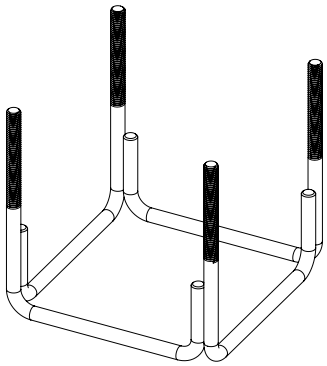

Fig. 1: Prefabricated anchor

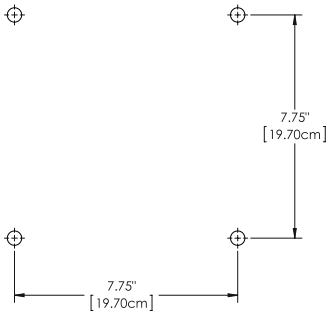

Fig. 2: Threaded rod spacing

The installer can use a prefabricated anchor offered by AddEnergie (part number: C+V1-ANCHOR) or make his own using 12” long ½” threaded rods spaced according to the pattern shown on left.

Concrete Base

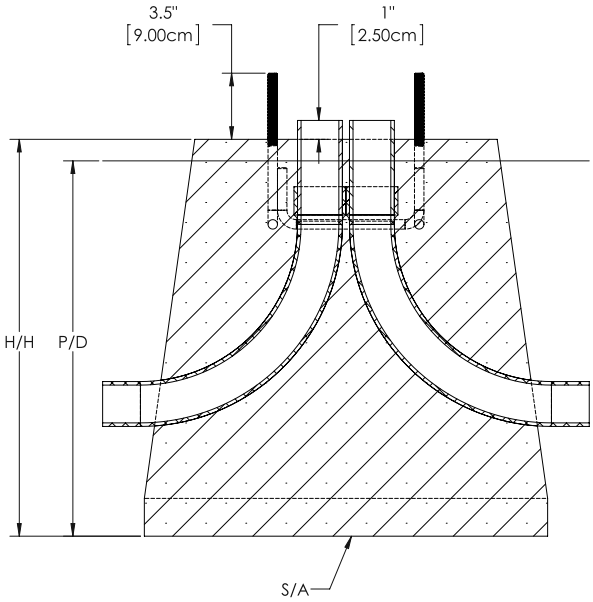

Fig. 3: Concrete Base

The base can be prefabricated or made on site using concrete formwork.

Determine the base’s height (H), depth in the ground (D) and the surface area (A) of its sole according to the soil type and the freeze thaw specifications of the installation area.

Use an electrical conduit of the appropriate size with a diameter of 2” or less to bring the electrical cables to the center of the anchor.

V10-2015-09-25

2015 ADDÉNERGIE TECHNOLOGIES INC. ALL RIGHTS RESERVED. Information and Specifications Contained in this Document are Subject to Change, Amendments, and Additions at any Time, Without Notice

Conduit Positioning

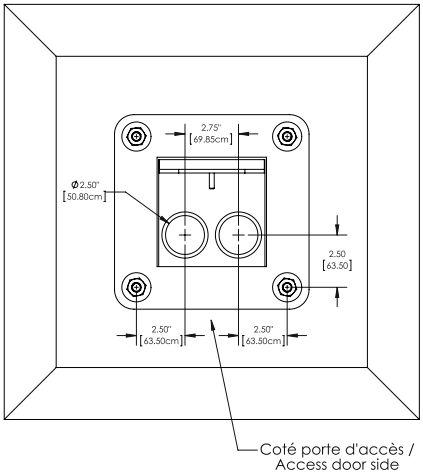

With 2 conduits and a cascading kit:

- The pedestal base opening has been sized to accept 2 PVC conduits up to 2 inches in diameter each, side by side.
- The 2 conduits must be placed side by side and centered between the anchor pins which are located on each side of the pedestal's access door.
- On the other axis, the conduits should be off center, toward the door, with the conduits' outer envelope maintained at a minimum distance of 1.25 inch (32 mm) from the axis passing through the center of the pins.

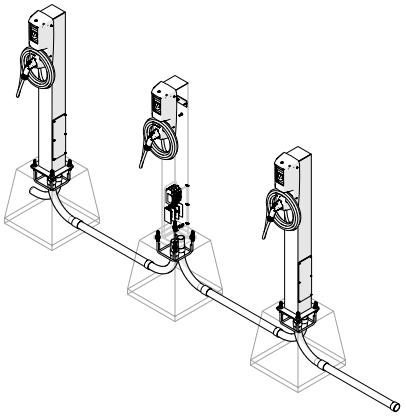

Cascading single station pedestals:

- When a single charging station head is mounted on a pedestal, it should always be facing the parking space it is serving.
- To have the head facing the parking space, the access door of the pedestal must be facing left or right.
- To have the access door facing left or right, the conduits must be placed side by side, as shown.

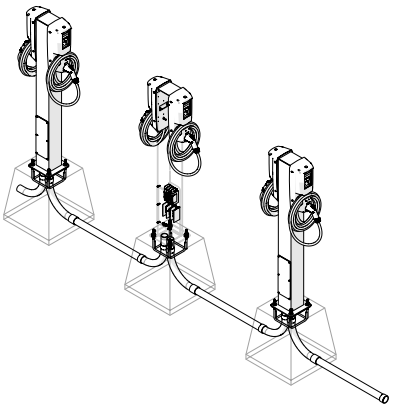

Cascading dual station pedestals:

- When 2 charging station heads are mounted on a pedestal, they should always be facing left and right.
- To have the heads facing left and right, the pedestal's access door should be facing the rear of the pedestal.
- To have the access door facing the rear of the pedestal, the conduits must be placed side by side, as shown.

V10-2015-09-25

2015 ADDÉNERGIE TECHNOLOGIES INC. ALL RIGHTS RESERVED. Information and Specifications Contained in this Document are Subject to Change, Amendments, and Additions at any Time, Without Notice

1 or 2 Devices on Separate Electrical Circuits

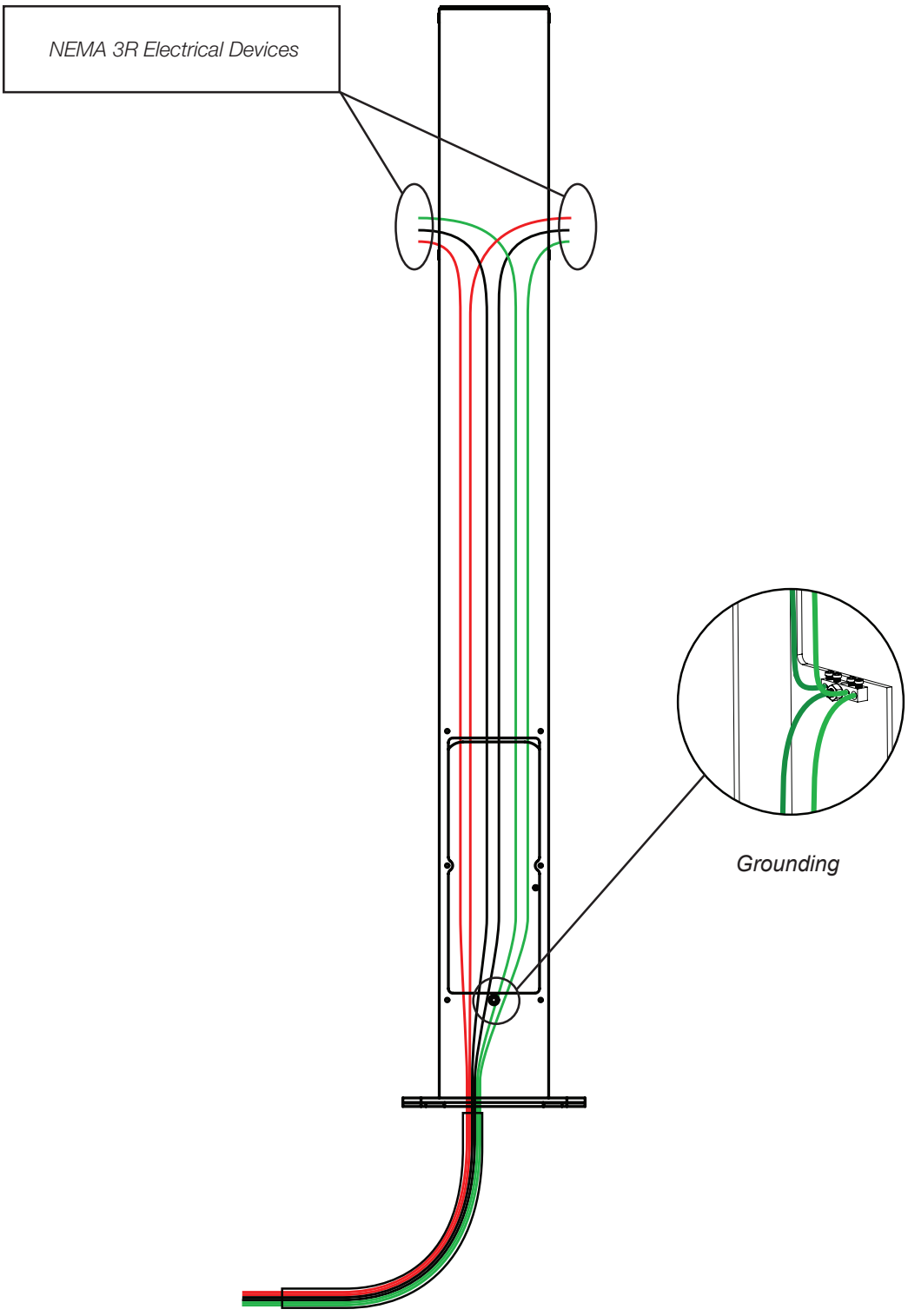

2015 ADDÉNERGIE TECHNOLOGIES INC. ALL RIGHTS RESERVED. Information and Specifications Contained in this Document are Subject to Change, Amendments, and Additions at any Time, Without Notice

Multiple Pedestals, Multiple Devices on Independent Electrical Circuits

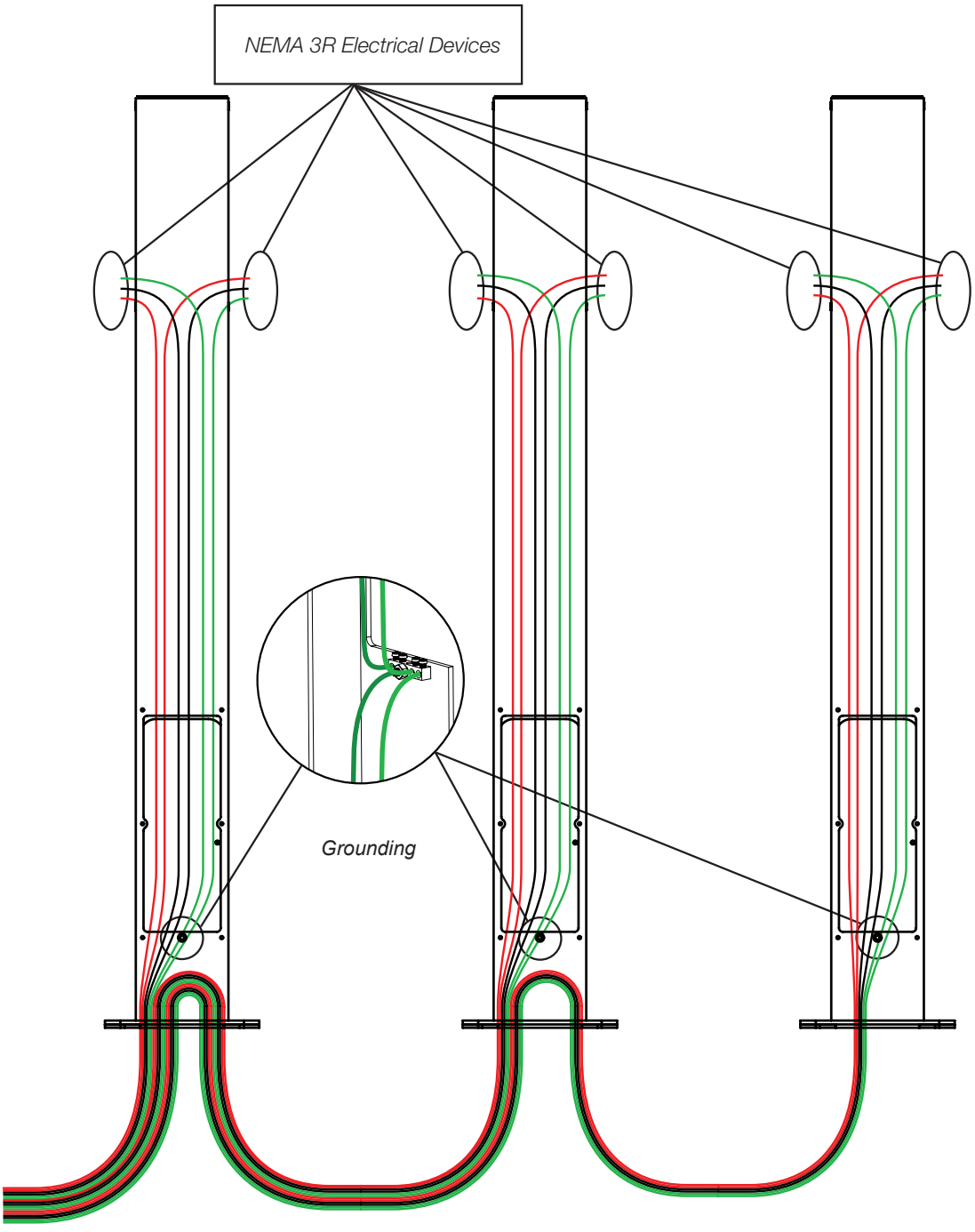

LIMIT = CONDUIT DIAMETER AND WIRE GAUGE

2015 ADDÉNERGIE TECHNOLOGIES INC. ALL RIGHTS RESERVED. Information and Specifications Contained in this Document are Subject to Change, Amendments, and Additions at any Time, Without Notice

Multiple Pedestals, Multiple Devices Sharing the Same Electrical Circuit

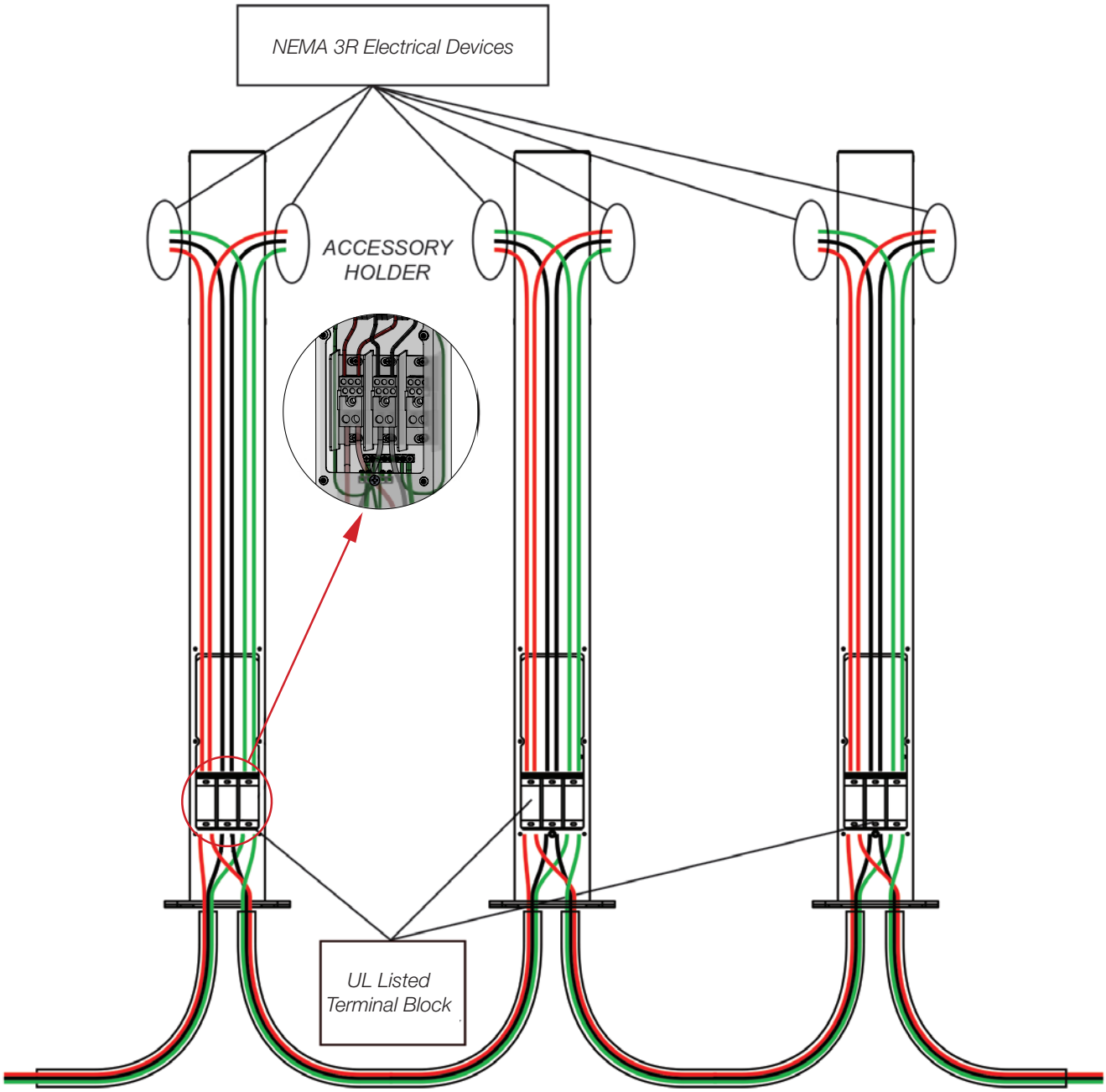

2015 ADDÉNERGIE TECHNOLOGIES INC. ALL RIGHTS RESERVED. Information and Specifications Contained in this Document are Subject to Change, Amendments, and Additions at any Time, Without Notice

Multiple Pedestals, Multiple Devices Sharing the Same Electrical Circuit, but with Circuit Breaker for each Devices

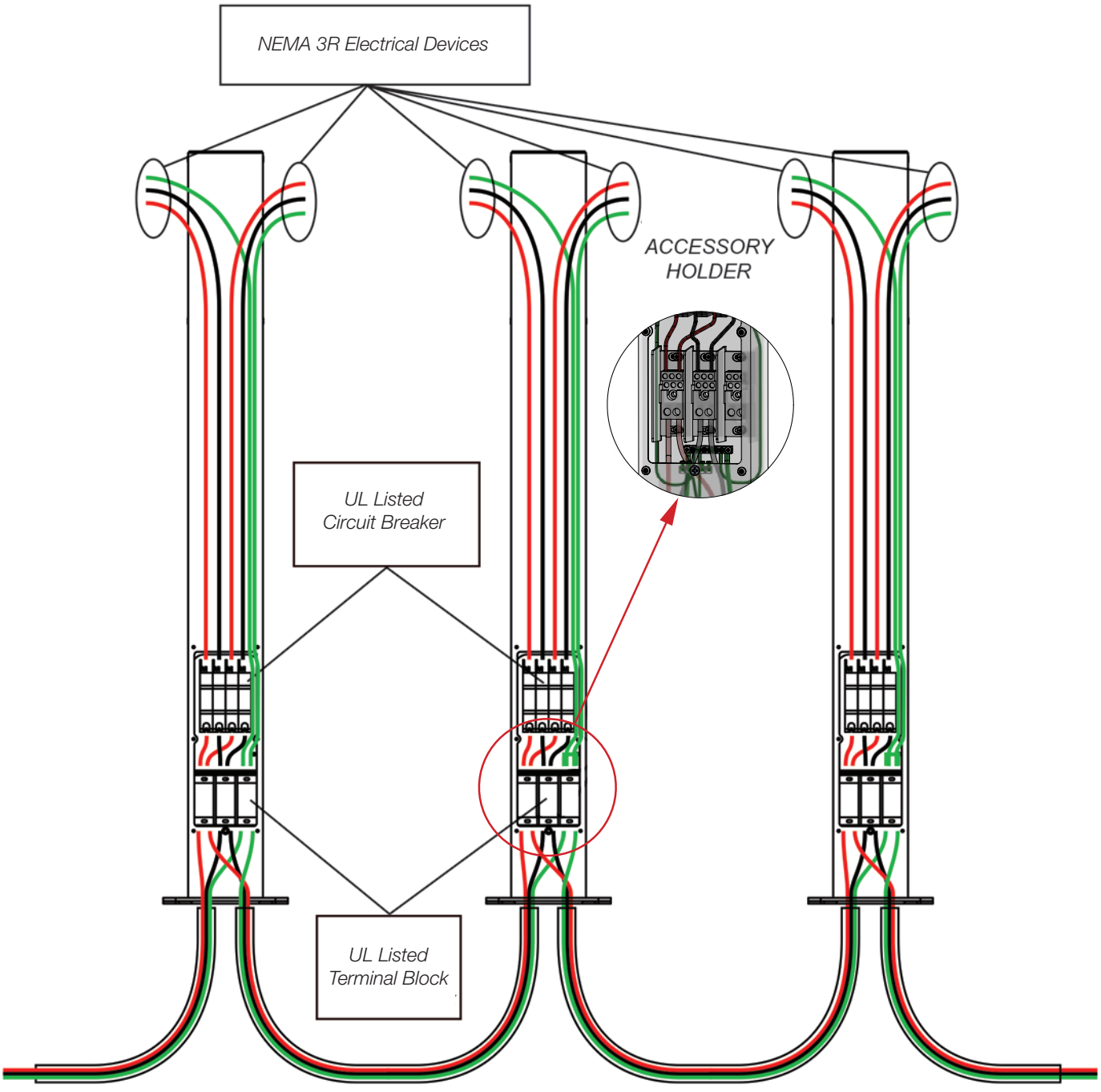

2015 ADDÉNERGIE TECHNOLOGIES INC. ALL RIGHTS RESERVED. Information and Specifications Contained in this Document are Subject to Change, Amendments, and Additions at any Time, Without Notice

Installation or commissioning questions:
(877) 505-2674 ext. 203

AddÉnergie Technologies Inc.
Eastern office: 2800 Louis-Lumière, office 100, Québec (QC) G1P 0A4 CANADA
Central office: 7420 Airport Road, Mississauga (ON) L4T 4E5 CANADA

Contact Us

AddENERGIE
Smart Charging Solutions

T. 1 877 505-2674
F. 855 505-2674
info@addenergie.ca
addenergie.ca