SmartDC

Installation guide

Table of contents

Safety

WARNING: RISK OF ELECTRICAL SHOCK, DO NOT OPEN.
Before servicing, disconnect AC power using external contactor and unplug charging connectors from electric vehicles.

IMPORTANT SAFETY INSTRUCTIONS - PLEASE DO NOT DISCARD THESE INSTRUCTIONS
Carefully read this guide before installing the EVSE.

1. This station was designed to be ground-based and installed on a non-combustible surface.
2. Check with local authorities that the location where the EVSE is to be installed is free of underground pipelines or electrical equipment, otherwise you could cause serious injury to yourself.
3. Connect the power station's supply with copper or aluminum conductors sized in conformity with the local code for a three-phase, 480 Y/277 V, 54 kVA (50 kW version) or 108 kVA (100 kW version) circuit, rated for usage at a maximum temperature of at least 75°C / 167°F.
4. Grounding: to ensure the safe operation of the station, it must be connected to a grounding circuit compliant with local regulations and installed by a certified electrician.
5. Communicate with a certified contractor, certified electrician or trained installer to ensure compliance with local building code, regulation, security standards and weather conditions.
6. Any alteration of a part of the station will automatically void the warranty.
7. Handle parts with care, since they can be sharp-edged. Always use safety glasses and gloves when unpacking and installing.
8. Some parts are heavy and could cause injury. Use proper lifting techniques and wear safety boots at all times during the installation.
9. Never insert your fingers into the electric vehicle's connector.
10. Never use the station if the flexible power cords seem damaged, or if the insulation is damaged.
11. Never use the station if the main case is broken, cracked, open, or damaged.
12. This station was designed to be used with electric vehicles equipped with a CHAdeMO or SAE J1772 Combo port.
13. This station is to be used to charge vehicles that do not require a ventilated environment during charging.
14. Replacement of the station's parts must be performed by qualified service personnel.
15. Do not install the station on or over combustible surfaces.

FCC NOTICE (FOR USA ONLY)
This equipment has been tested and found to comply with the limits for a Class A digital device, pursuant to Part 15 of the FCC Rules. These limits are designed to provide reasonable protection against harmful interference when the equipment is operated in a commercial environment. This equipment generates, uses, and can radiate radio frequency energy and, if not installed and used in accordance with the instruction manual, may cause harmful interference to radio communications. Operation of this equipment in a residential area is likely to cause harmful interference in which case the user will be required to correct the interference at his own expense.

The enclosed device complies with Part 15 of the FCC Rules. Operation is subject to the following two conditions: (i.) this device may not cause harmful interference and (ii.) this device must accept any interference received, including interference that may cause undesired operation.

Exposure to Radio Frequency Energy: The radiated power output of the communication modules included in this device is below the limits recommended for the general population for uncontrolled exposure as defined in the FCC standards. This device should be operated with a minimum distance of at least 20 cm between itself and a person's body and must not be colocated or operated with any other antenna in order to comply the conditions of the FCC Grants.

Modifications not expressly approved by AddÉnergie Technologies inc. could void the user's authority to operate the equipment.

Specifications

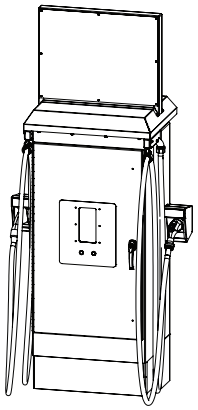

Model: **SmartDC**
Version: V3
Company Info: AddÉnergie Technologies Inc
Document revision number: US.11.2019.v1

* Shown with optional cable management system installed.

	50 kW	**100 kW**
Type of charging station	Direct-current fast charging station	
Output connector	SAE J1772 Combo and CHAdeMO	
Input connector	Screw type distribution bloc, 500 MCM max (L1 L2 L3 N) 2/0 AWG max (GND)	
Nominal voltage supply	Three-phase 480 Y/277 V (must be protected by a 100 A, three-phase over-current protection device)	Three-phase 480 Y/277 V (must be protected by a 200 A, three-phase over-current protection device)
Maximum power consumption	54 kVA	108 kVA
Maximum output power	50 kW	100 kW
Efficiency	93% or better	
Power Factor	98% or better	
Delivered weight	300 kg (675 lbs)	

The charging station is a non linear load.

Integrated Protection:
- Against voltage surges
- Electric current leakages to ground
- Isolation failures between the DC output and ground
- Safety ground failures between the charger and the ground vehicle

Operating Temperature: -40°F to 122°F
Casing: 3R enclosure type for exterior use

Security standards compliance:
- UL 2202 : Standard for Electric Vehicle (EV) Charging System Equipment
- UL 2131-1, UL 2131-2 : Standard for Safety for Personnel Protection Systems for Electric Vehicle (EV) Supply Circuits
- CSA C22.2 NO. 107.1-16 : General Use Power Supplies
- CSA C22.2 NO. 281.1-12, CSA C22.2 NO. 281.2-12 : Standard for Safety for Personnel Protection Systems for Electric Vehicle (EV) Supply Circuits
- FCC part 15 Class A
- ICES-3(A) / NMB-3(A)

Specifications and Center of Gravity

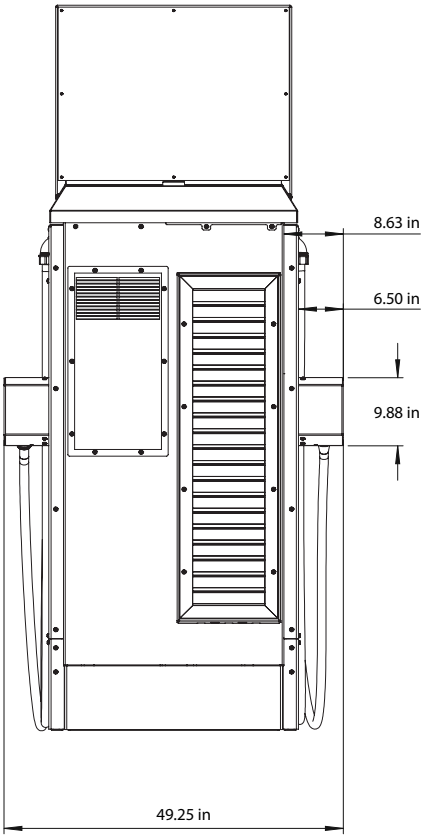

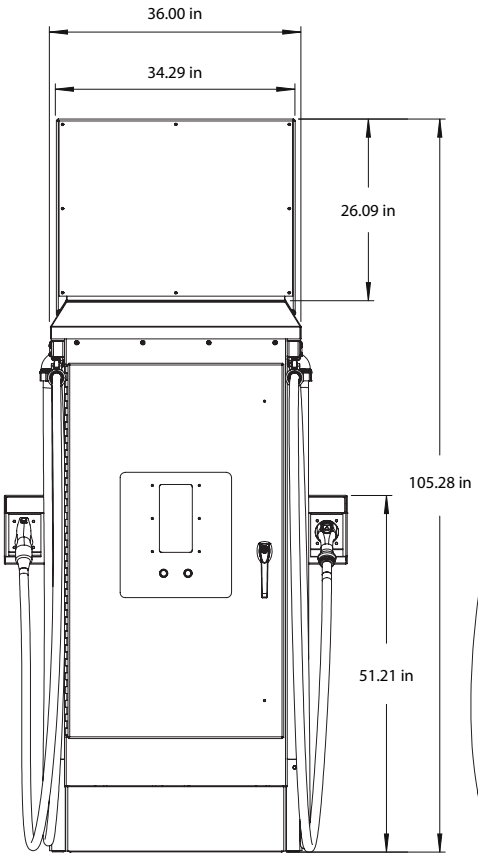

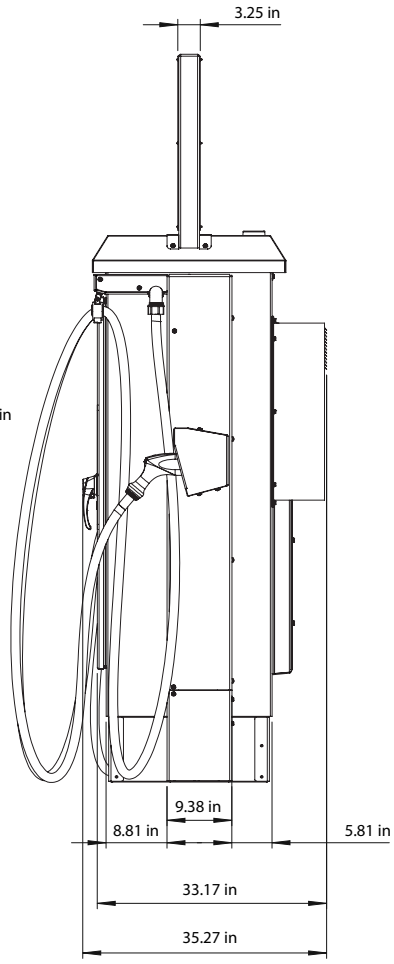

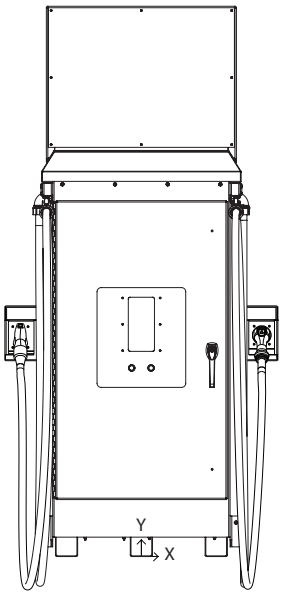

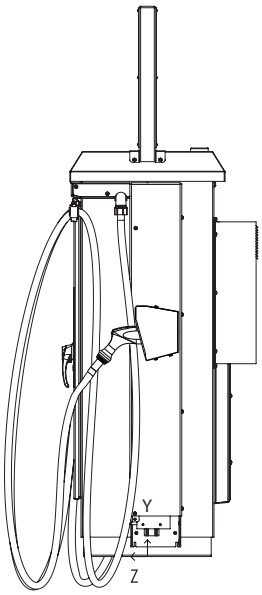

	CoG (approx)
X	25 mm (1 in)
Y	940 mm (37 in)
Z	58 mm (-2 in)

** Shown with optional cable management system installed*

Exterior preview of the station

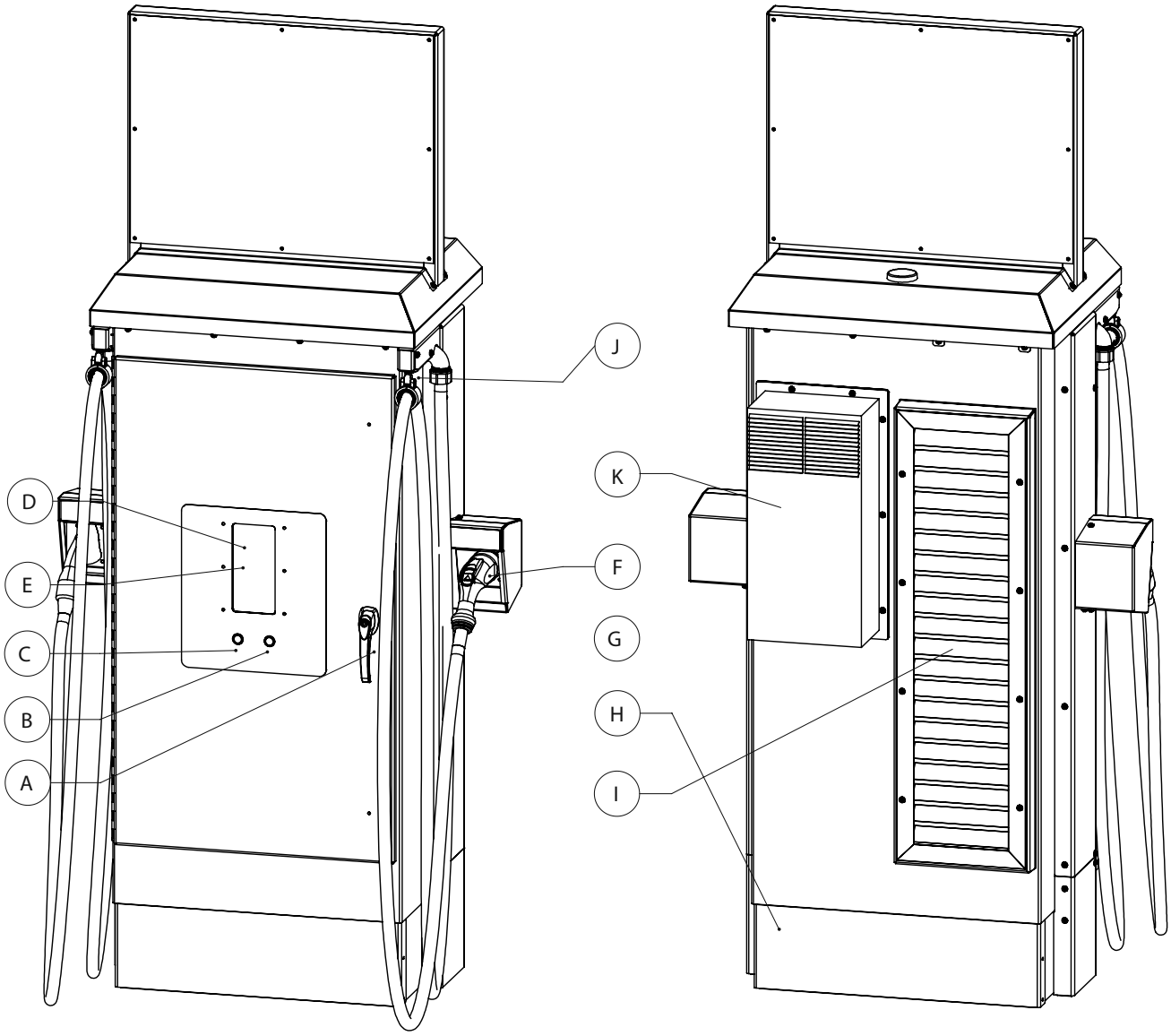

A : Locking door handle
B : Start button
C : Stop button
D : Display
E : RFID card reader
F : SAE J1772 Combo connector
G : CHAdeMO connector
H : Base
I : Air intake
J : Cable management system
K : Heat exchange unit

Interior preview of the station

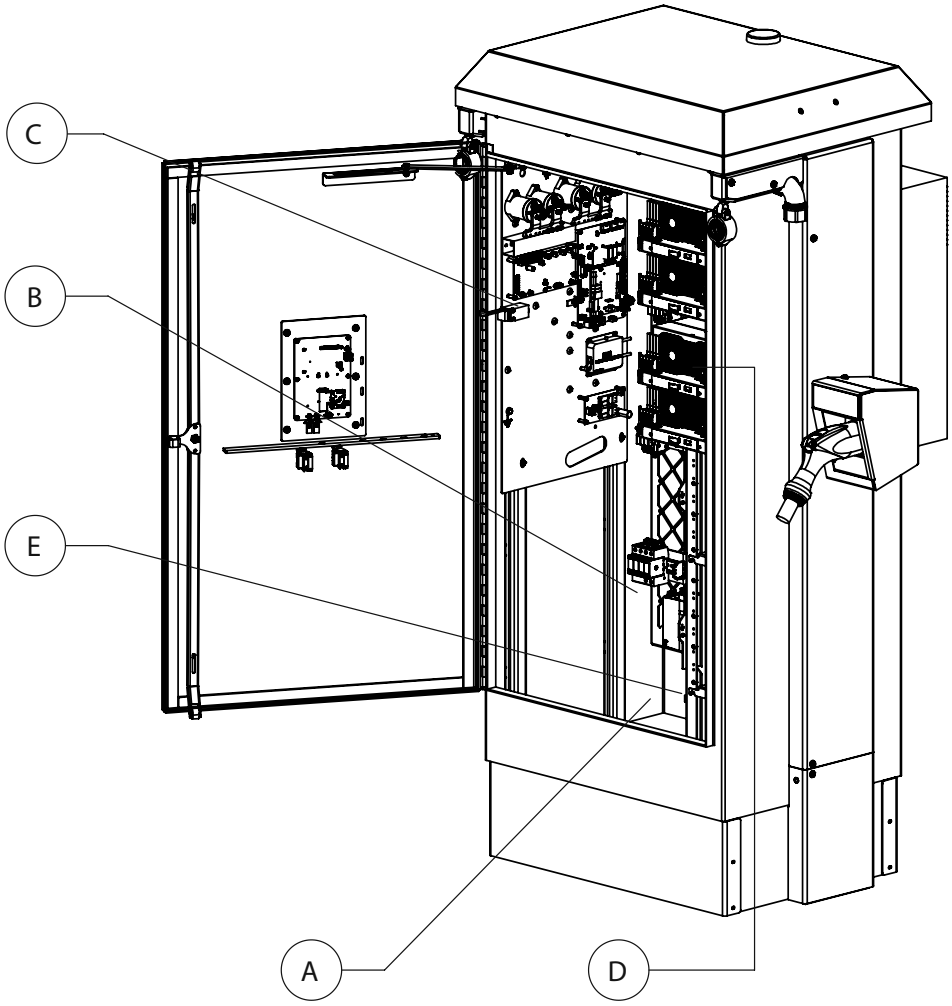

A : Power cable access
B : Three-phase and neutral terminals
C : Door switch
D : AC/DC conversion modules
E : Grounding terminal

Typical installation

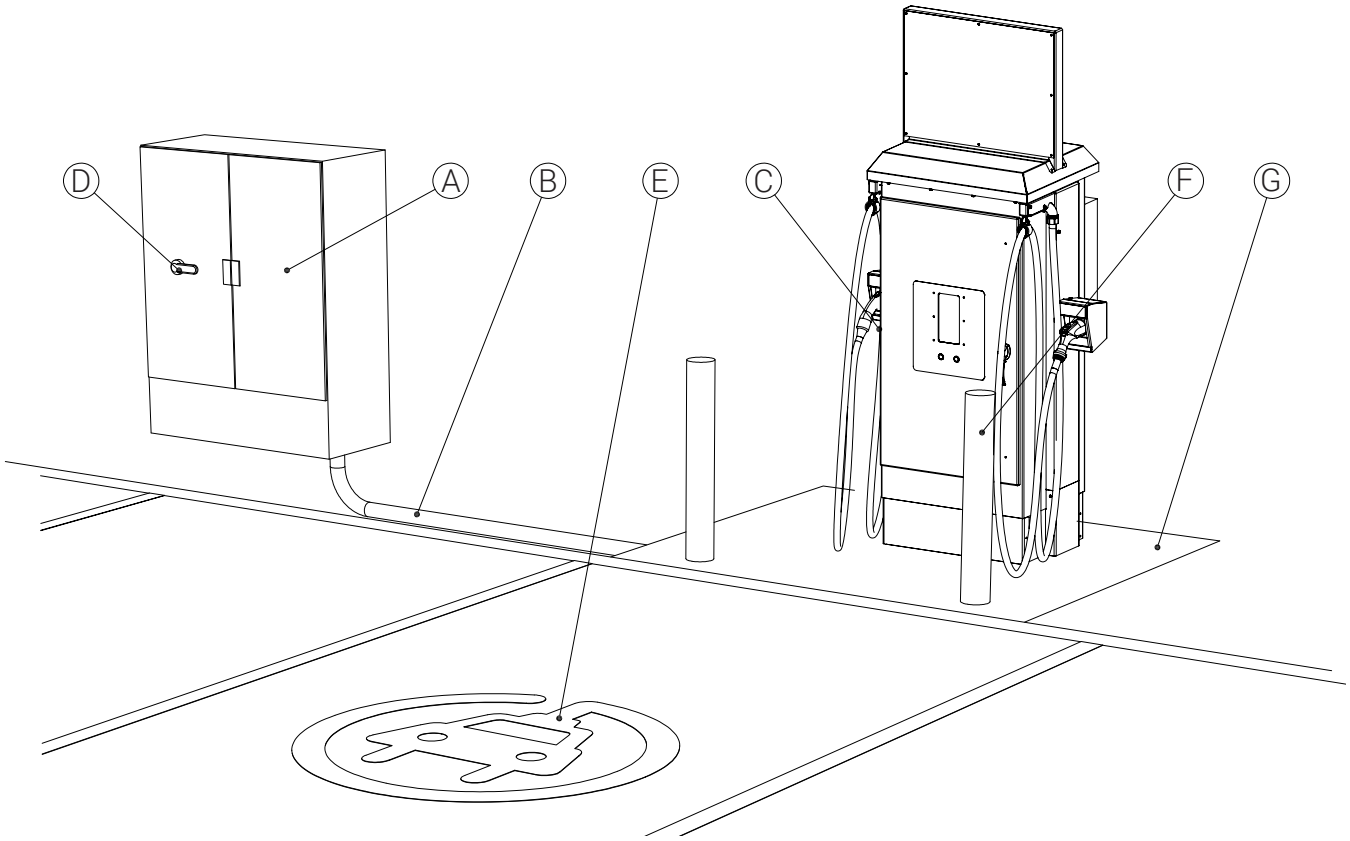

A : Electrical equipment cabinet (metering, protection and distribution)
B : Power cable (three-phase 480 Y/277 Volts @ 100 A or 200 A + NEUTRAL + GROUND)
C : SmartDC Station
D : Master disconnect switch (must be visible from the station)
E : Parking space for the electric vehicle
F : Protective bollard
G : Concrete Slab

When a step down or a step up transformer is necessary to convert the available voltage to the required 480 Volts nominal, a Y auto transformer, a ./Y transformer, or a Y/Y transformer is suitable.

WARNING: Open Delta Type autotransformer and transformers having their primary configured as « Open Delta » are proscribed.

The product offers mounting configurations that support ADA compliance. Validate with local authorities on how to design the site.

Site preparation

Option 1:
Bollards on concrete slab

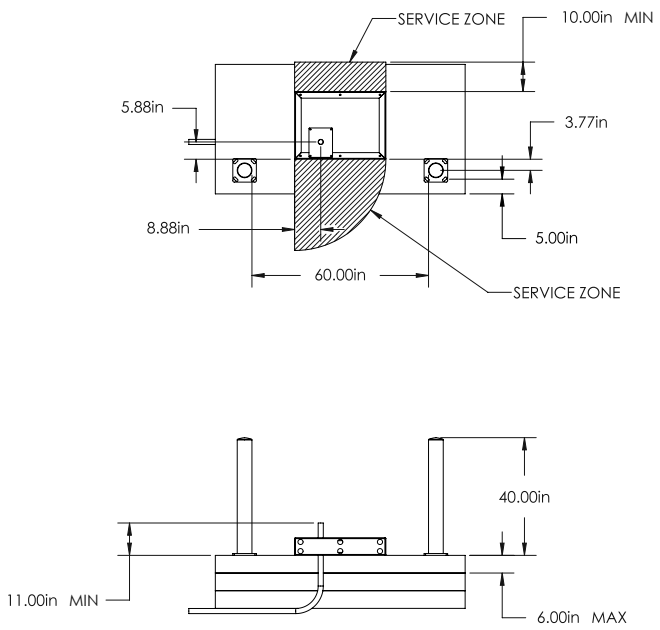

Option 2:
Bollards next to concrete slab

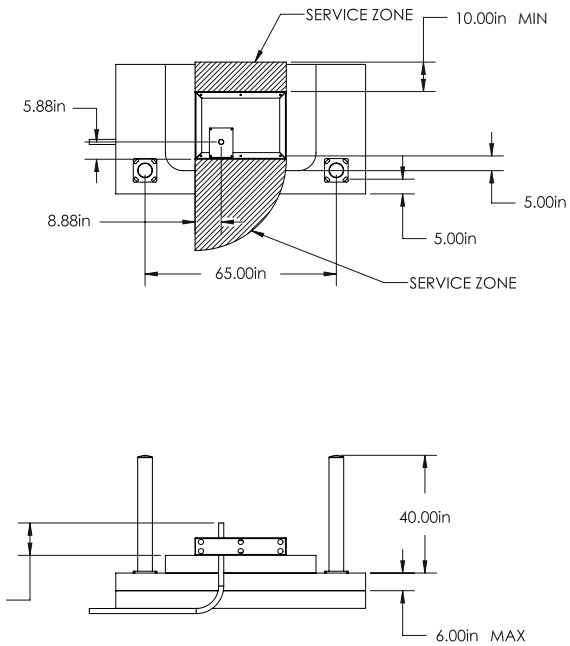

1. The station must be installed on a concrete slab.
2. The surface of the concrete slab must be large enough to install both the station, and the protective bollards, and still have enough space for users to circulate. The above figure shows the ideal dimensions and distances to respect.
3. The ground underneath the slab must be properly drained and stabilized (as required), so that it is not affected by freezing.
4. An electric conduit compliant with local regulations of appropriate diameter (based on the electric wire gauge) must bring the electric cable under the station's perimeter, preferably in the forward-left zone under the station's perimeter.

NOTE: Wiring conduit must be sealed to prevent moisture ingress
IMPORTANT: A clearance of at least 16 inches must be maintained between the enclosure's back and a rear facing wall or any vertical obstacle.

Base Installation on concrete slab

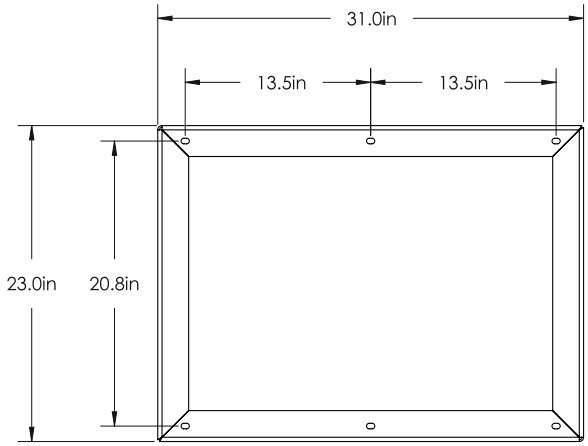

Top view

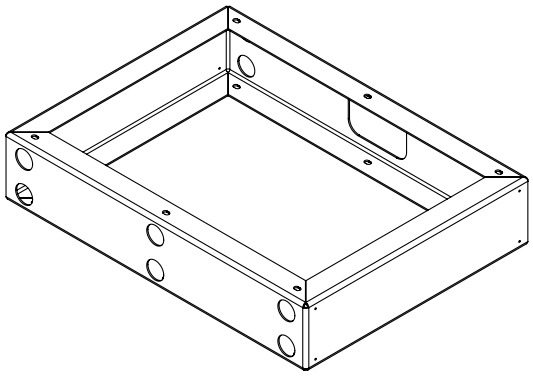

ISO vue

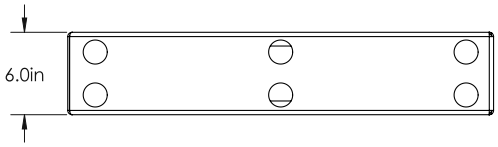

Front view

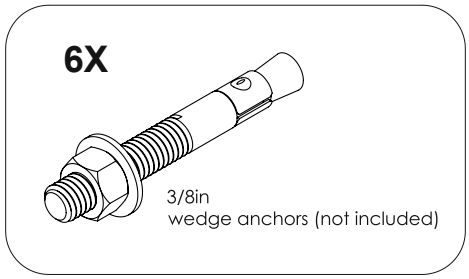

1. Use stainless steel 3/8 in concrete wedge anchors (not included).
2. Drill holes in the concrete slab of diameter and depth appropriate for the anchors, according to the base's mounting holes, as illustrated.
3. Once the holes are drilled, place the base and screw in the anchors.

Lifting and handling of the station

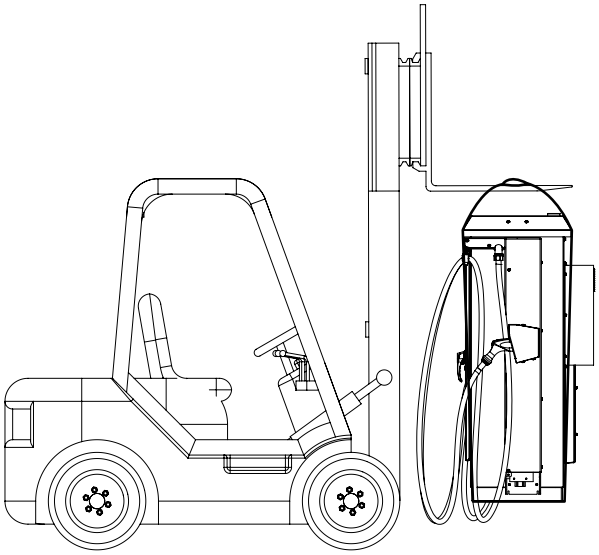

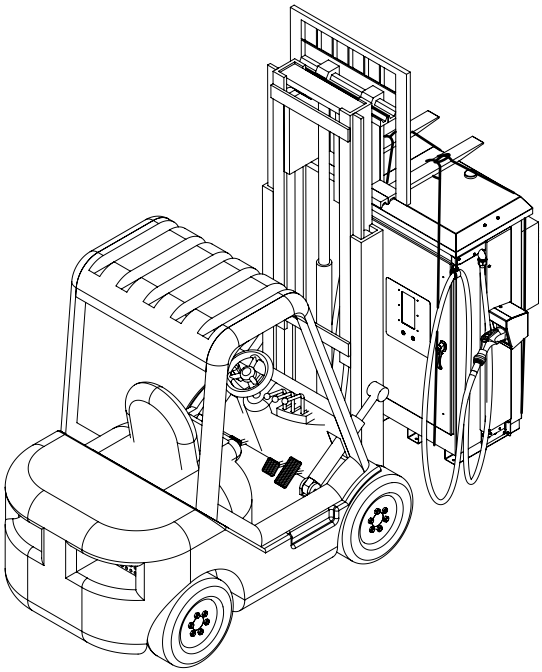

NOTE:
USE 2 X WEB SLING MIN 17' (MIN VERTICAL WORKING LOAD LIMIT 3100 LBS)

Example of an appropriate lifting technique

Installing the station onto the base

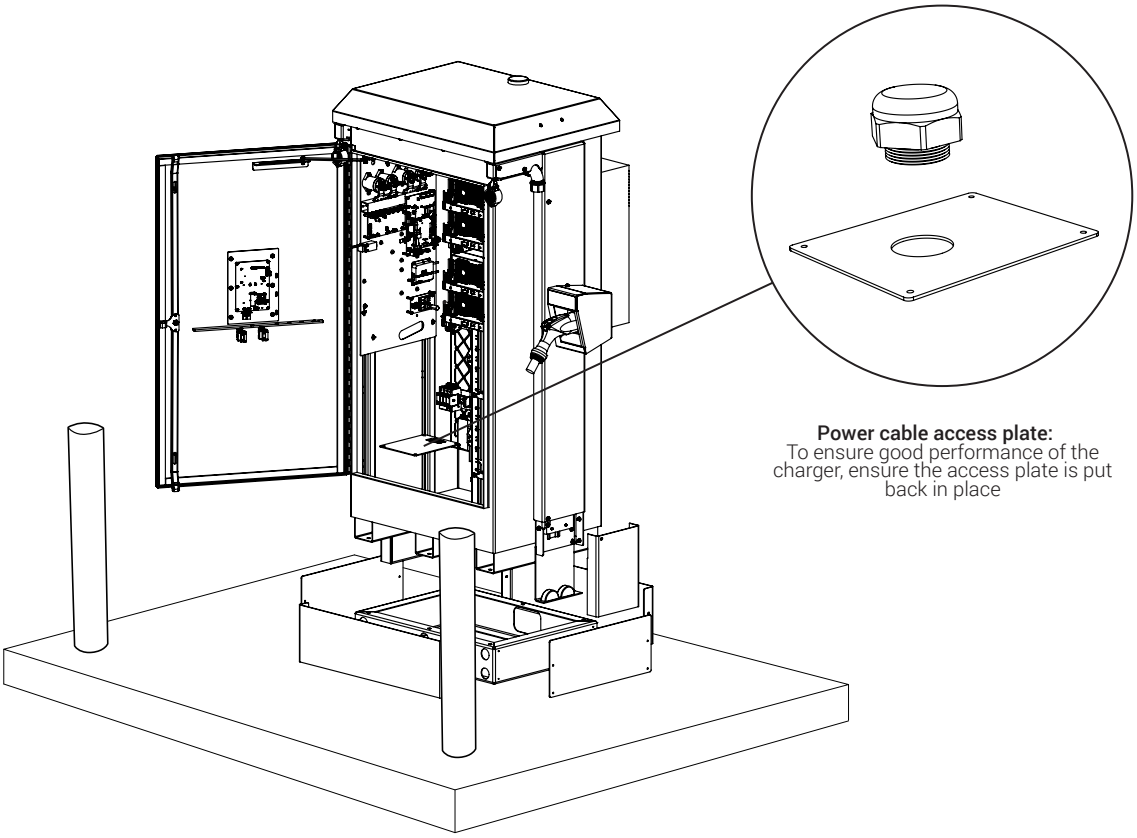

1. Remove the access plate to allow the passage of the power cable.
2. Place the station onto its base, making sure to pass the power cable through the access hole.
3. Punch a hole in the access plate of an appropriate diameter for the cable connector.
4. Install the cable connector onto the access plate.
5. Insert the power cable into the cable connector.
6. Put the access plate back in place.

Installing the counterweight (optional)

1. Install the aluminum plate with the rubber stoppers and secure it with the bolts. Ensure the aluminum plate is resting firmly on the ground.

2. Remove the security screw and release the counterweight.

CAUTION: DO NOT put your hands or fingers between the rubber stoppers and the counterweight.

3. Place the cover over the counterweight system.

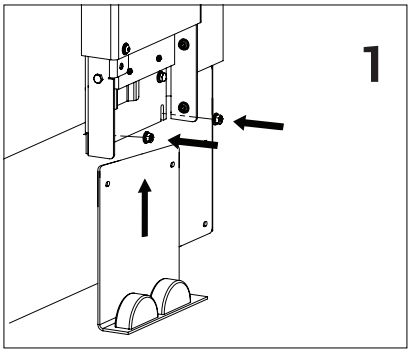

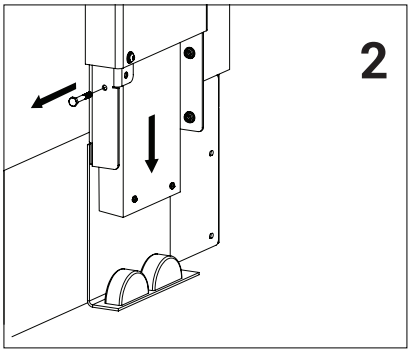

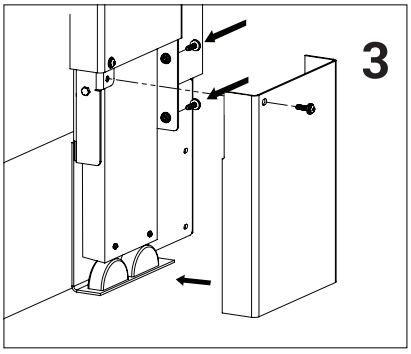

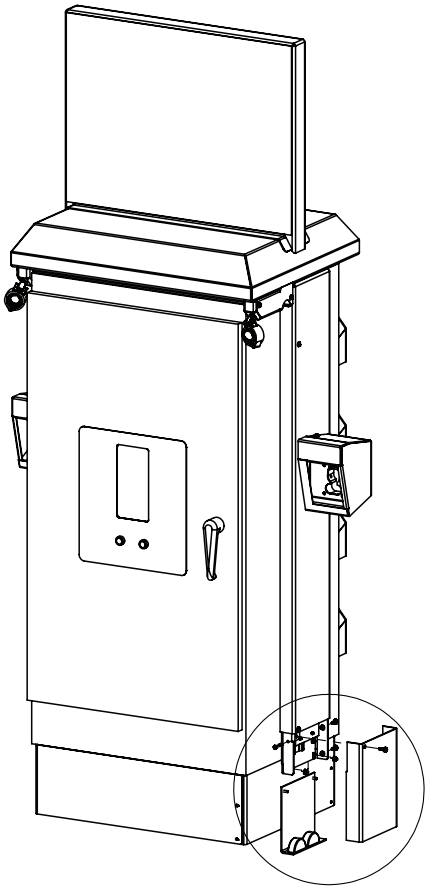

IMPORTANT: DO NOT remove the rubber stoppers from the aluminum plate, since this may result in damage to the charging station.

Installing the top sign

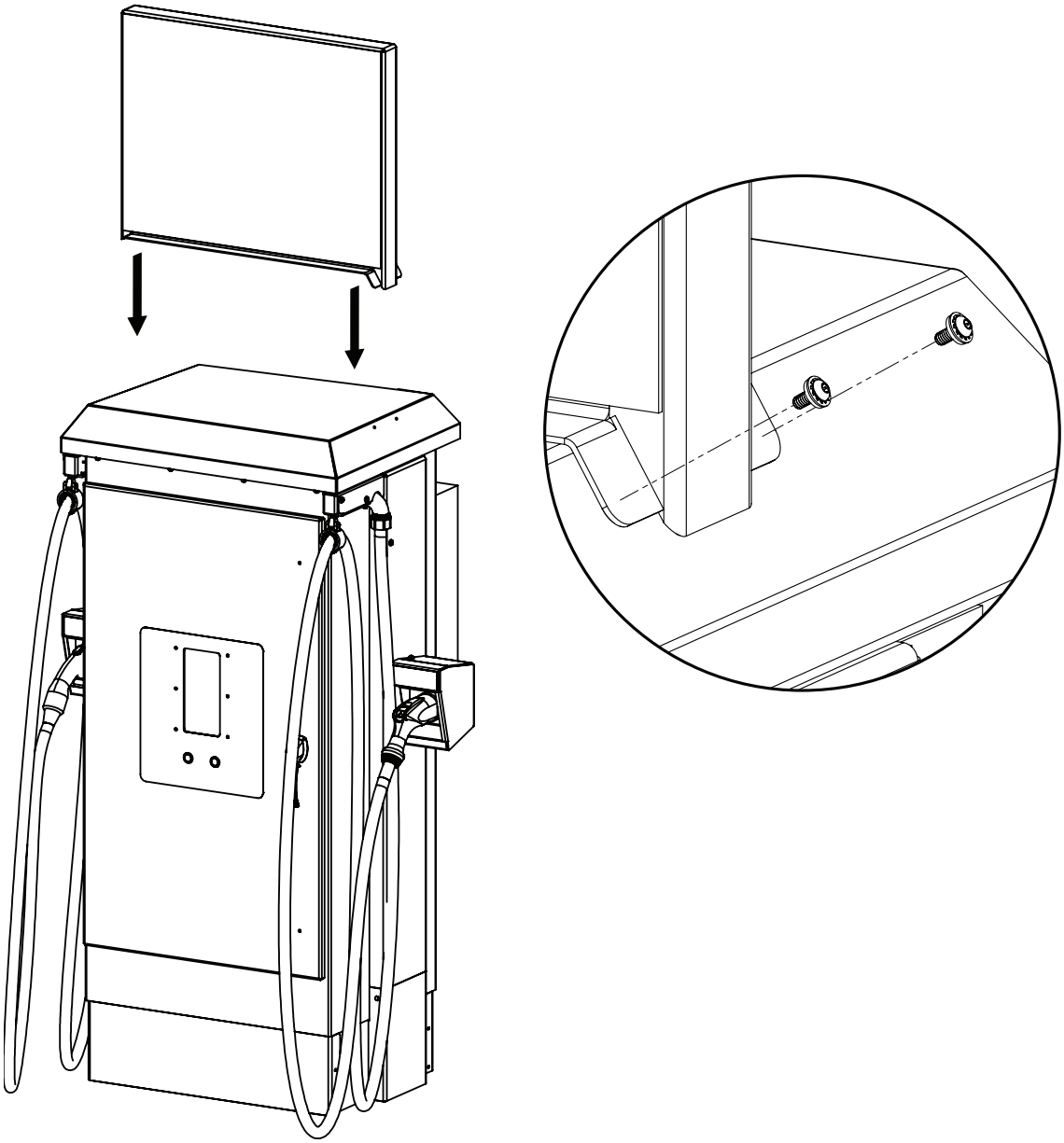

1. Align the panel with the 4 holes on top of the charging station.
2. Screw the 4 bolts to secure the panel.

NOTE: If there are any issues while installing the Top Sign, please contact AddEnergie support.

Electrical connections to the station

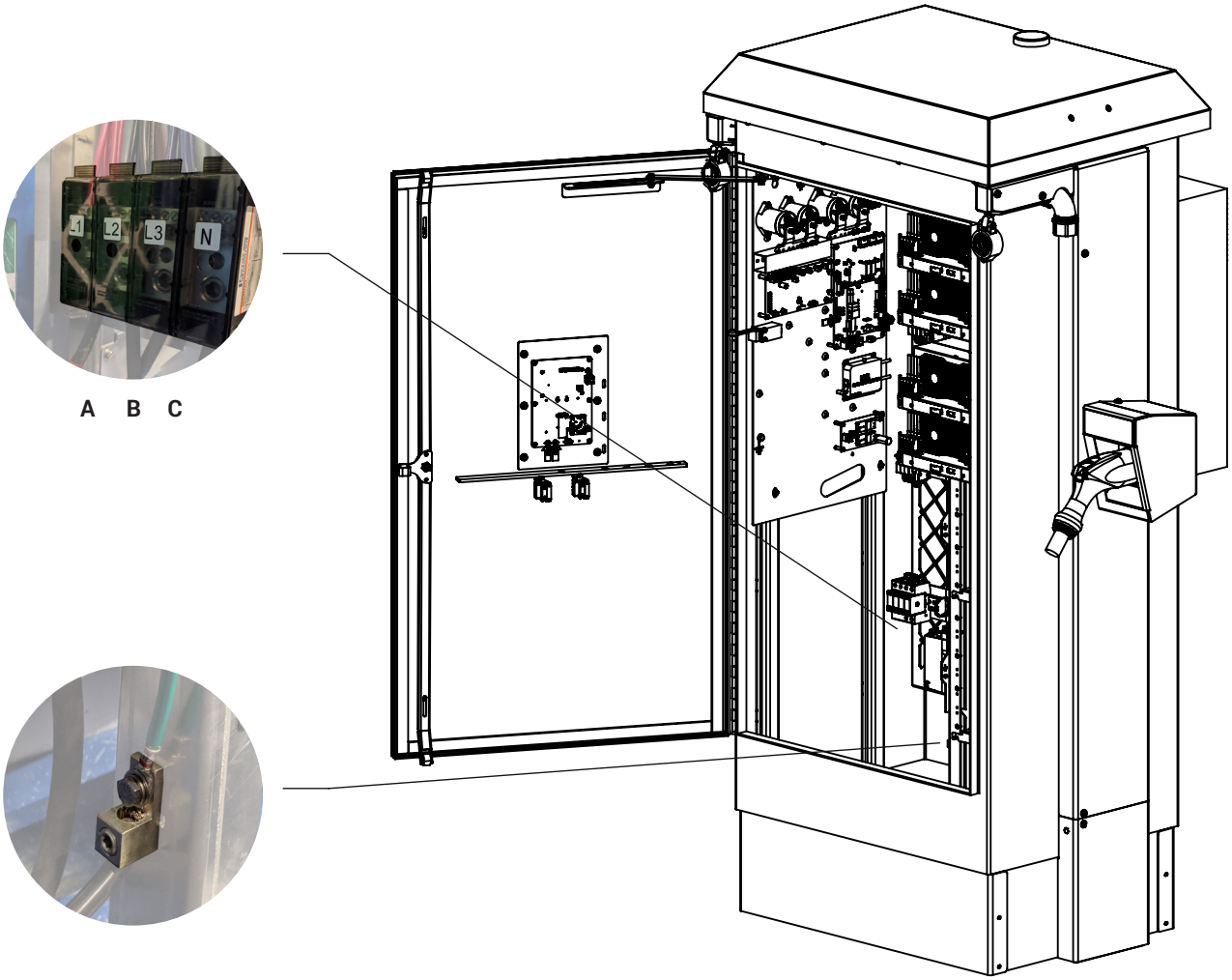

1. Connect the three phase-conductors and the neutral conductor into the power terminal with a torque of 500 Lb-In.
2. Connect the GROUND into the grounding terminal with a torque of 50 Lb-In.

NOTE: Connectors are compatible with copper and aluminum wire.

Station start-up

Before turning the station on:

1. The electrician must ensure that the electrical installation conforms to the applicable electrical code.
2. The circuit breakers inside the charging station must be in the “ON” position.

As the station is being turned on:

1. The electrician must verify that the station’s three-phase 480 Y/277 V voltage is within specifications.

Once the station is on:

1. Close and lock the charging station’s casing door.

Putting the station into service:

1. After the station has been turned on, messages will appear on the screen in front of the station, confirming that it is now functional.
2. The station will then attempt to communicate with the AddÉnergie servers.
3. Once the station and gateway are powered on, please communicate with the technical support of AddÉnergie to complete the configuration: (877) 505-2674 ext. 203.

Care and maintenance of the station

THIS STATION REQUIRES YEARLY MAINTENANCE TO ENSURE PROPER OPERATION.

MAINTENANCE MUST BE PERFORMED BY ADDÉNERGIE.

It consists of:

1. Cleaning or replacing the cooling system filters.
   *It is important to maintain proper airflow inside the station to adequately cool the power modules.
2. Inspecting the critical components of the station.
   *cables/connectors, power modules, etc.

We recommend that you increase the frequency of station maintenance to 4 times a year in the following situations:

• When the station is installed in a dusty area.
• When the station's average cumulative use exceeds 3 hours of charging per day.

Installation or commissioning questions:
(877) 505-2674 ext. 203

AddÉnergie Technologies Inc.
Eastern Office: 2800 Louis-Lumière, Suite 100, Quebec (QC) G1P 0A4 CANADA
Central Office: 7420 Airport Road, Mississauga (ON) L4T 4E5 CANADA
United-States Office: 75 South Clinton Ave. Suite 510, Rochester (New-York), 14604, USA

Contact Us
T. 1 877 505-2674
F. 855 505-2674
info@flo.com
flo.com

flo.com